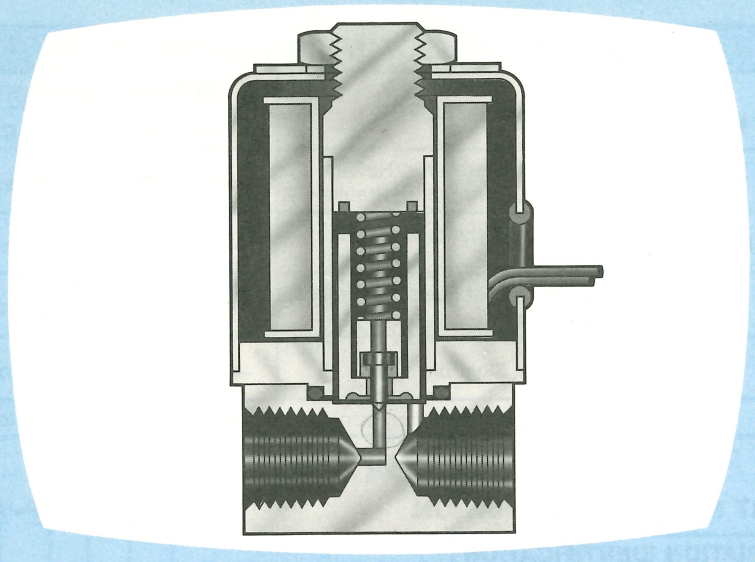

CIRCLE SEAL CONTROLS

MINIATURIZED SOLENOID SHUTOFF VALVE

600 Series
0-3000 PSI

Purpose:
Circle Seal 600 Series Solenoid Shutoff Valves provide miniaturized, leak-proof, direct actuated, high pressure opration for use in pilot plants, test systems, control circuits, etc. with high flow rates and low pressure drop for use with virtually any type of fluid.

OPERATING CHARACTERISTICS

ZERO LEAKAGE—Floating poppet design provides bubble-tight sealing even with corrosive fluids.

LOW SOLENOID PULL—Unique impact principle opens poppet even against high pressure with low solenoid pull.

HIGH FLOW RATE; LOW PRESSURE DROP—.052 diameter orifice permits high flow rates for valve size with low pressure drop.

LOW AMPERAGE, LONG-LIFE COIL—DC coils rated for continuous duty at temperatures from −40° to 250°F. AC coils rated for continuous duty at temperatures from −40° to 125°F.

DIRECT ACTUATION—Only two moving parts provides for maintenance-free operation. Parts may easily be replaced if necessary without removing valve from the line.

SAFETY—Explosion-proof case is designed to isolate system fluid from the coil, even if body seal is inadvertently left out by field repair personnel.

CHOICE OF ELECTRICAL CONNECTIONS—Available with grommet, conduit or AN electrical connections.

HOW IT WORKS

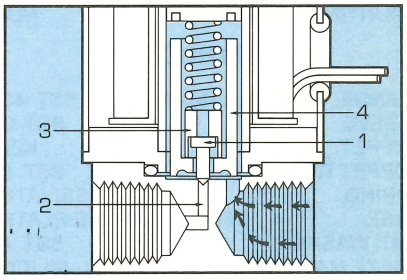

CLOSED

In the closed position the Kel-F poppet (1) is impressed against the orifice (2) by the spring and seals the orifice. The poppet retainer (3) bottoms on the shoulder of the armature (4).

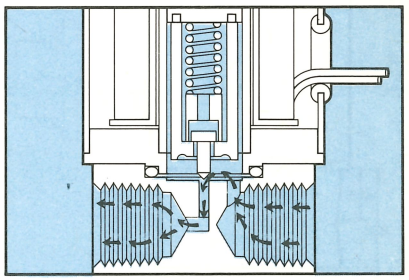

OPENING

When coil is energized, armature lifts the poppet off the seat allowing flow through the orifice.

CLOSING

When coil is de-energized, spring returns poppet to seat. Armature returns to normal position. Spring force plus pressure again provides dead tight seal.

Representatives in Principal U.S. Cities

CIRCLE SEAL CONTROLS
BRUNSWICK CORPORATION
POST OFFICE BOX 3666
ANAHEIM • CALIFORNIA • 92803
(714) 774-6110

MINIATURIZED SOLENOID SHUTOFF VALVE

600 Series

0-3000 PSI

SERVICE RECOMMENDATIONS

MODEL NUMBER	O-RING MATERIAL	SUITABLE FOR	AMBIENT TEMPERATURE	
			AC COIL	DC COIL
649	BUNA-N	General Purpose—Air, Helium, Hydrogen, Nitrogen, Hydraulic Oil.	−40° to +125°F	−40° to +250°F
633	NEOPRENE	Oxygen, Acetylene, Freon 12, Freon 22.	−40° to +125°F	−40° to +250°F
632	VITON	Aircraft and Jet Fuels, Aromatics, Carbon Tet.	−20° to +125°F	−20° to +250°F
662	EPR	Acetylene, Skydrol.	−40° to +125°F	−40° to +250°F
620	TEFLON	Suitable for virtually any service.	−40° to +125°F	−40° to +250°F

TECHNICAL DATA

ACTUATION . . . . . NORMALLY CLOSED
OPERATING PRESSURE
GAS SERVICE, A.C. . . . . 0-3000 PSI
D.C. . . . . 0-750 PSI
LIQUID SERVICE, A.C. . . . . 0-1500 PSI
D.C. . . . . 0-750 PSI
BURST PRESSURE . . . . . OVER 7500 PSI
LEAKAGE, 10-3000 PSI . . . . . ZERO
TEFLON POPPET 0-1500 PSI . . . . . ZERO
MOUNTING LIMITATIONS . . . . . NONE

CONSTRUCTION

FLANGE, STOP, PLUNGER . . . . . SST. 430F
SLEEVE . . . . . SST. 316
POPPET . . . . . KEL-F
POPPET RETAINER . . . . . SST. 303
SPRING . . . . . SST. 302 (PASSIVATED)
CASE . . . . . STEEL (CHROME PLATED)
NUT, WASHER . . . . . SST. 416
BRAZE MATERIAL . . . . . NICKEL-SILICON-BORON

DIMENSIONS

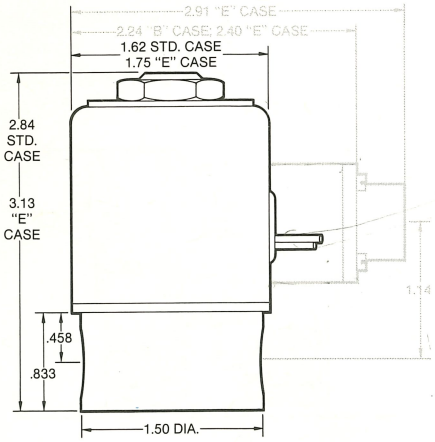

TYPICAL FLOW CURVES

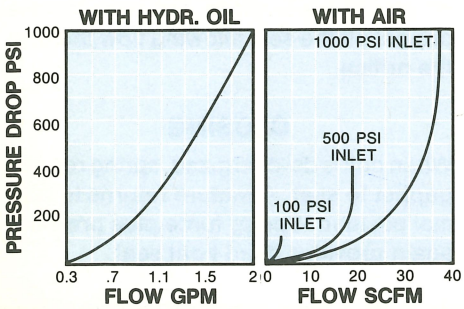

HOW TO ORDER

PART NUMBER DESIGNATION — A 649 T-2PP- A E

VARIATION IDENTIFICATION
A—Teflon Poppet

BASIC MODEL NUMBER

BODY MATERIAL
T—Stainless Steel, 303

CONNECTIONS (Tube in 1/16", Pipe in 1/8")
B—Female Tube (AND10050) P—Female Pipe

VOLTAGE
A—115 AC 60HZ D—24 DC
B—230 AC 60HZ E—6 DC
F—12 DC

CASE & ELECT. CONNECTION
A—Standard with Grommet C—Standard with AN
B—Standard with Conduit E—Explosion Proof Case with Conduit

PART NUMBERS

CONNECTION	SIZE	POPPET MATERIAL	CASE			
			STANDARD/GROMMET		EXPLOSION PROOF/CONDUIT	
			COIL			
			VOLTAGE 115 AC	VOLTAGE 24 DC	VOLTAGE 115 AC	VOLTAGE 24 DC
PIPE	¼	Kel-F	649T-2PP-AA	649T-2PP-DA	649T-2PP-AE	649T-2PP-DE
	¼	Kel-F	633T-2PP-AA	633T-2PP-DA	633T-2PP-AE	633T-2PP-DE
	¼	Kel-F	632T-2PP-AA	632T-2PP-DA	632T-2PP-AE	632T-2PP-DE
	¼	Kel-F	662T-2PP-AA	662T-2PP-DA	662T-2PP-AE	662T-2PP-DE
	¼	Kel-F	620T-2PP-AA	620T-2PP-DA	620T-2PP-AE	620T-2PP-DE
TUBE	¼	Kel-F	649T-4BB-AA	649T-4BB-DA	649T-4BB-AE	649T-4BB-DE
	¼	Kel-F	633T-4BB-AA	633T-4BB-DA	633T-4BB-AE	633T-4BB-DE
	¼	Kel-F	632T-4BB-AA	632T-4BB-DA	632T-4BB-AE	632T-4BB-DE
	¼	Kel-F	662T-4BB-AA	662T-4BB-DA	662T-4BB-AE	662T-4BB-DE
	¼	Kel-F	620T-4BB-AA	620T-4BB-DA	620T-4BB-AE	620T-4BB-DE

For Class H Coil, specify "H" as shown in "How to Order."

ELECTRICAL DATA

COIL	HOLDING CURRENT	TEMPERATURE RISE*
6v DC	1.03 amps	150°F
12v DC	.63 amps	
24v DC	.35 amps	
115v60Hz	.26 amps	275°F
230v60Hz	.14 amps	

*Above Ambient

©COPYRIGHT 1985 BRUNSWICK CORPORATION.
Printed in U.S.A. All rights reserved.

CSP-238-L•12/87

CIRCLE SEAL CONTROLS
BRUNSWICK CORPORATION
POST OFFICE BOX 3666
ANAHEIM • CALIFORNIA • 92803
(714) 774-6110